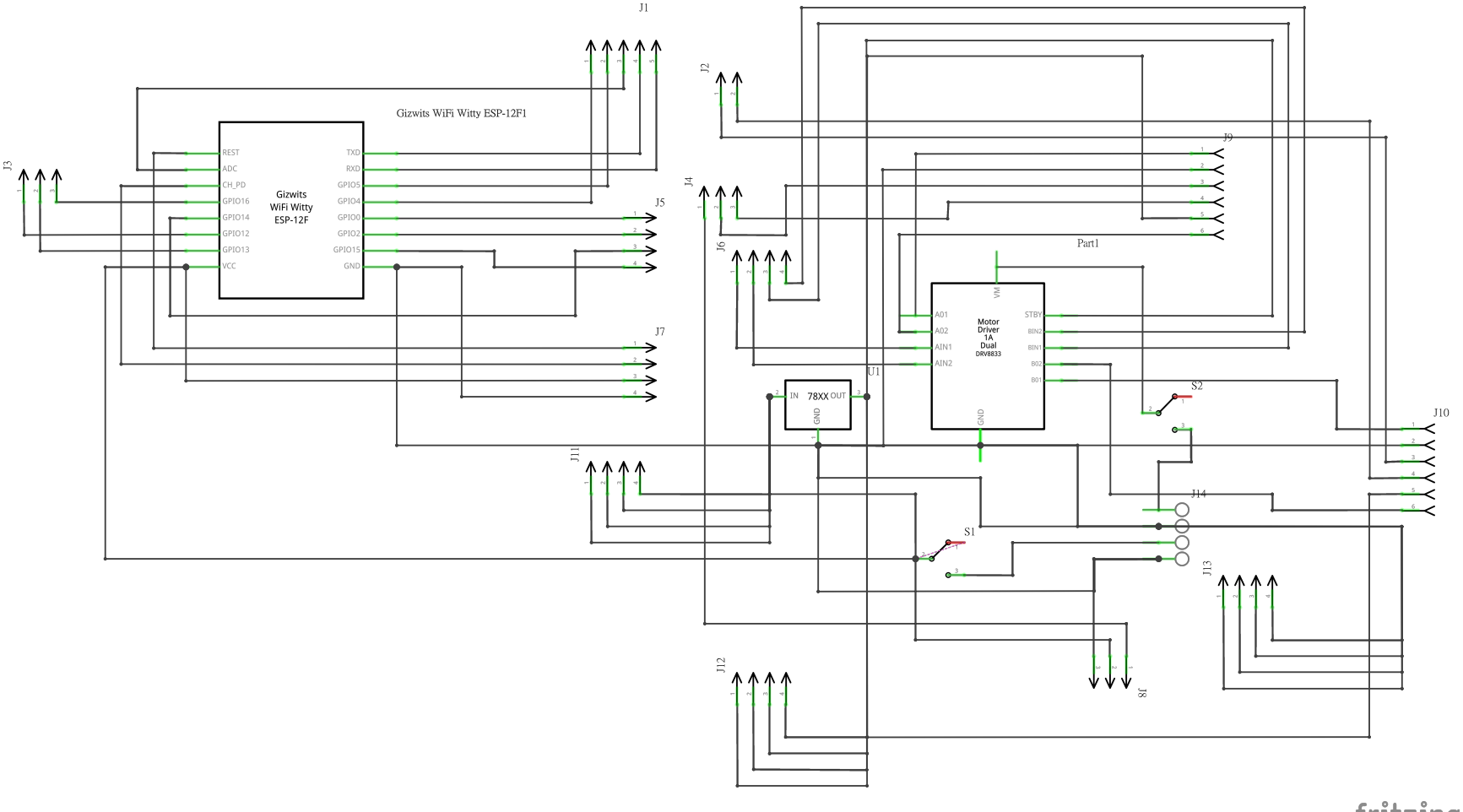
Gizwits WiFi Witty ESP-12F1
Gizwits
WiFi Witty
ESP-12F
REST
ADC
CH_PD
GPIO16
GPIO14
GPIO12
GPIO13
VCC
TXD
RXD
GPIO5
GPIO4
GPIO0
GPIO2
GPIO15
GND
J1
J2
J3
J4
J5
J6
J7
J8
J9
J10
J11
J12
J13
J14
Part1
Motor
Driver
1A
Dual
DRV8833
VM
A01
A02
AIN1
AIN2
STBY
BIN2
BIN1
B02
B01
GND
U1
78XX
IN
OUT
GND
S1
S2
fritzing